UNIVERSITY OF TWENTE.

THE DUTCH NATIONAL ATLAS IN A SERVICE-ORIENTED ARCHITECTURE

BAREND KÖBBEN
kobben@itc.nl || b.j.kobben@utwente.nl

ITC FACULTY OF GEO-INFORMATION SCIENCE AND EARTH OBSERVATION

a story about different worlds...

National GeoData Infrastructure

National Atlas

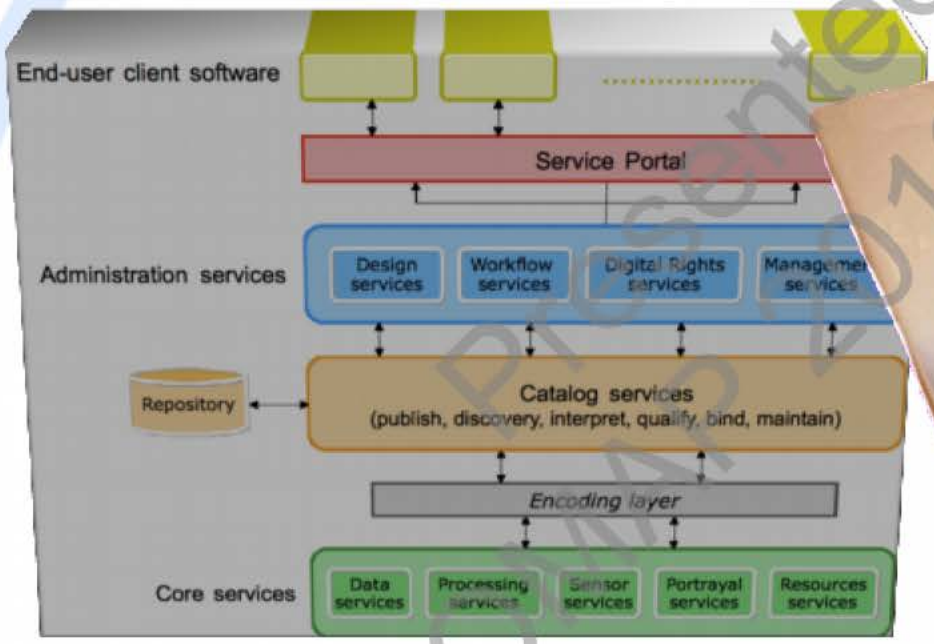

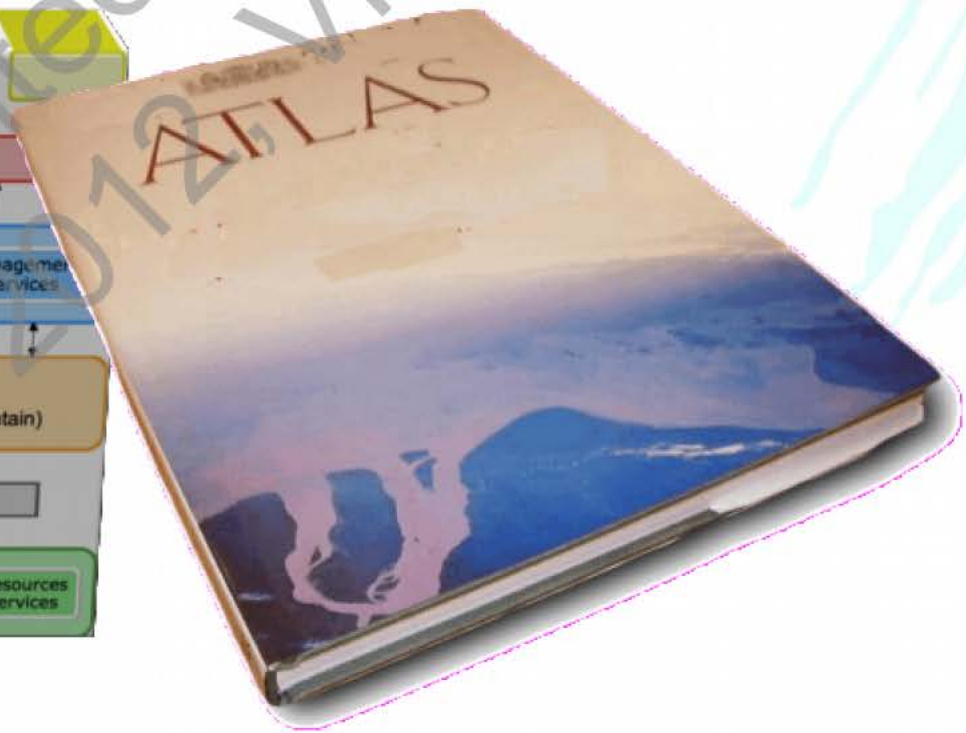

...and how we tried to join them

Background

changing role of cartography in a changing world:

- information disseminated in digital ways
- all about sharing, interoperability, web services, SDIs and the modern two–way Web 2.0
- this has consequences on the design of (web)cartography solutions in this environment
- subject of research projects in our group at ITC

Mapping in a webservices environment

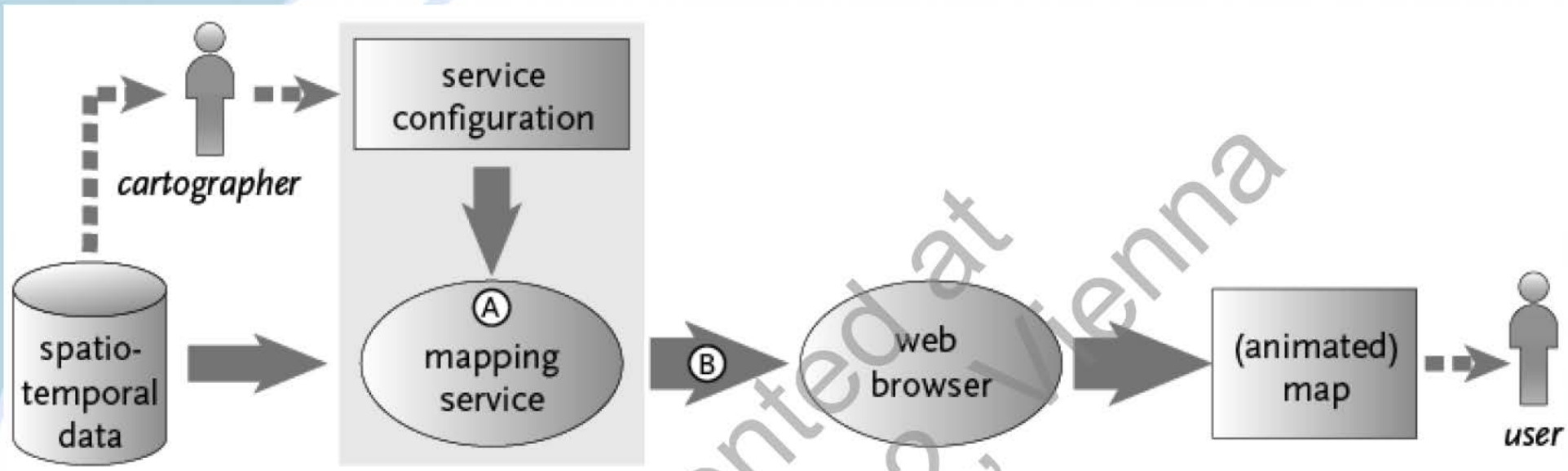

- possibilities for ***direct*** and *automatic* production of maps
- where 'direct' means:
  generated case–by–case and on–the–fly from the data
  - important for system to be an SDI node
  - able to consume data from any other SDI node

Mapping in a webservices environment

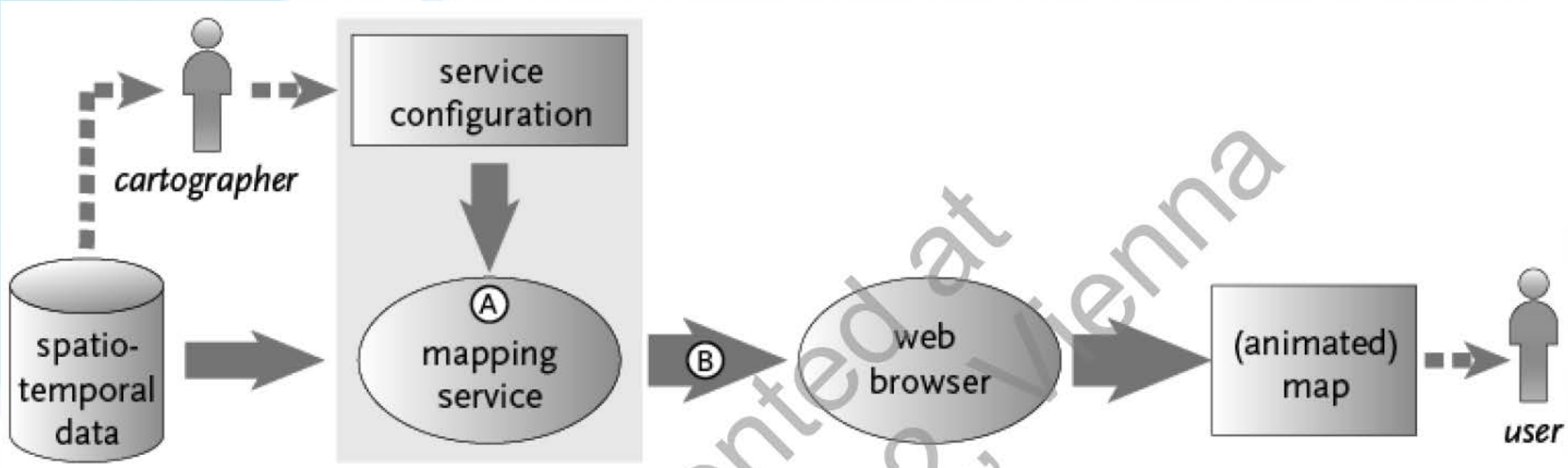

– possibilities for *direct* and ***automatic*** production of maps

– where 'automatic' means:
maps will be generated from the spatio-temporal data by the system "*working by itself with little or no direct human control*"

(Concise Oxford Dictionary of Current English)

Mapping in a webservices environment

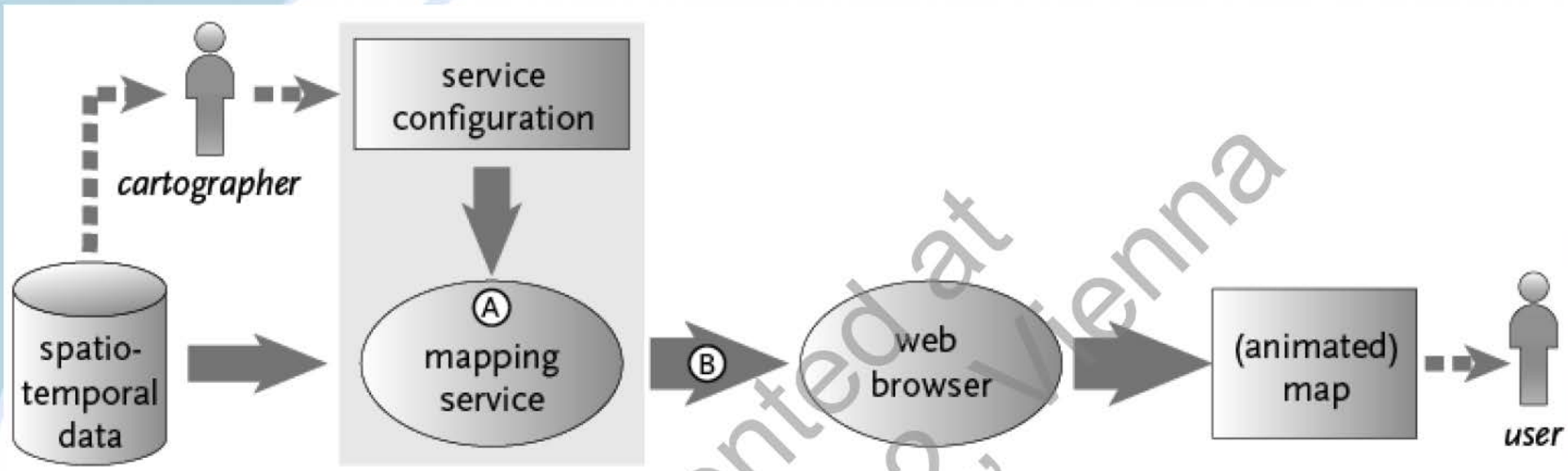

- nowadays a very important dissemination channel
- but partly takes us back to "the old days":
  - "pre-cooked" maps in a one–way process
  - little user influence on design and content
  - little interactivity and exploration possibilities
  - "cartographer" (map–maker) ≠ user
    determines most of the map design and usability

a story about different worlds...

National GeoData Infrastructure

National Atlas

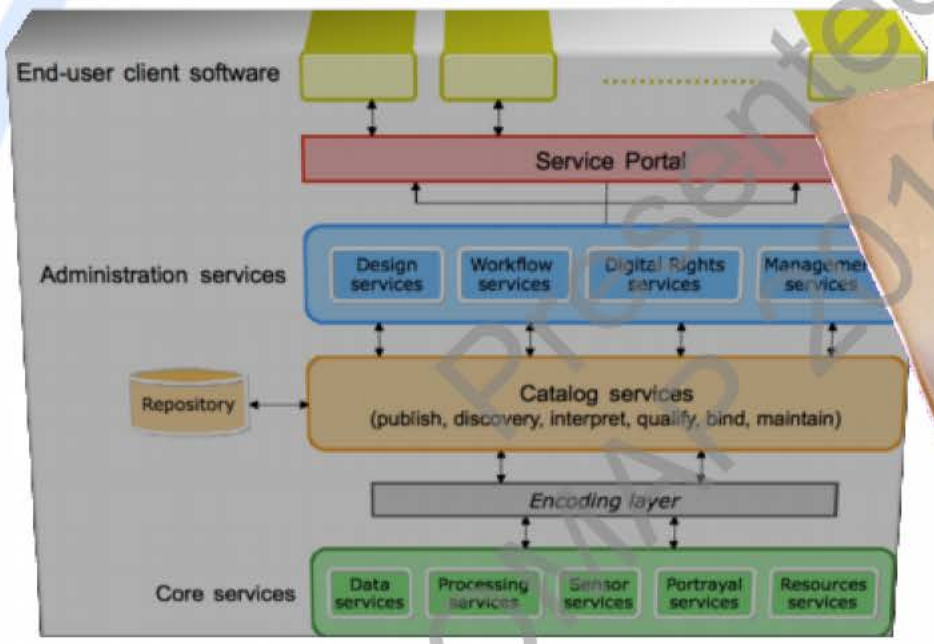

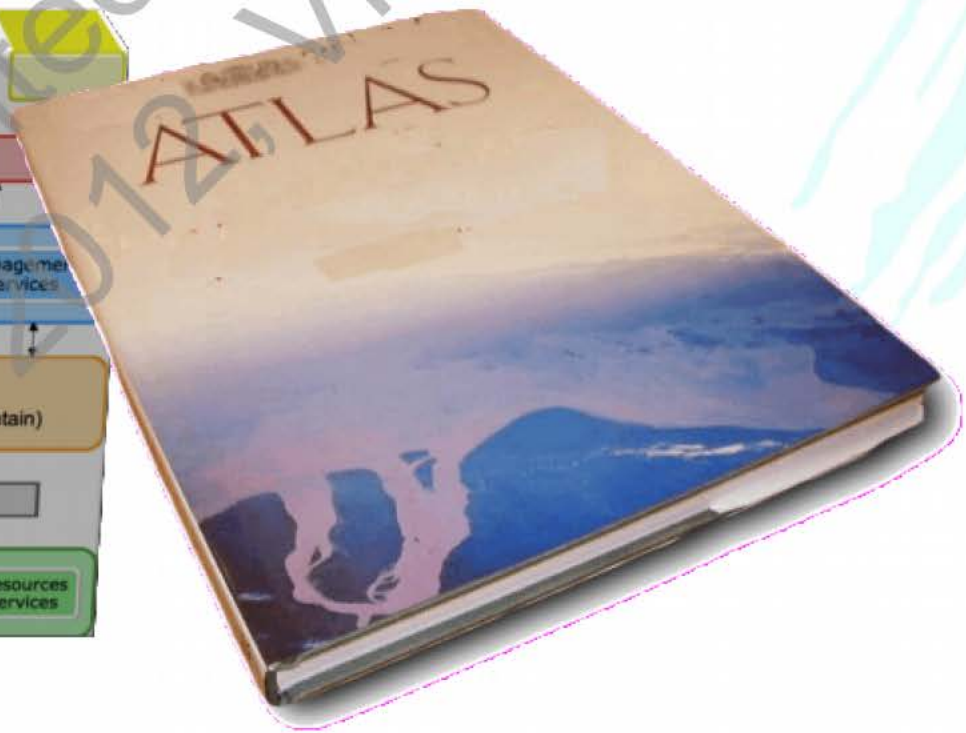

...and how we tried to join them

(National) Atlas

atlases present a synthesis:

- comprehensive combinations of spatial datasets represented by maps

information is optimised for visualisation

- comparable
- of uniform scale (resolution)
- generalised (uniformly)
- comparable times / time series
- having uniform classifications, semantics, colour schemes, etc...

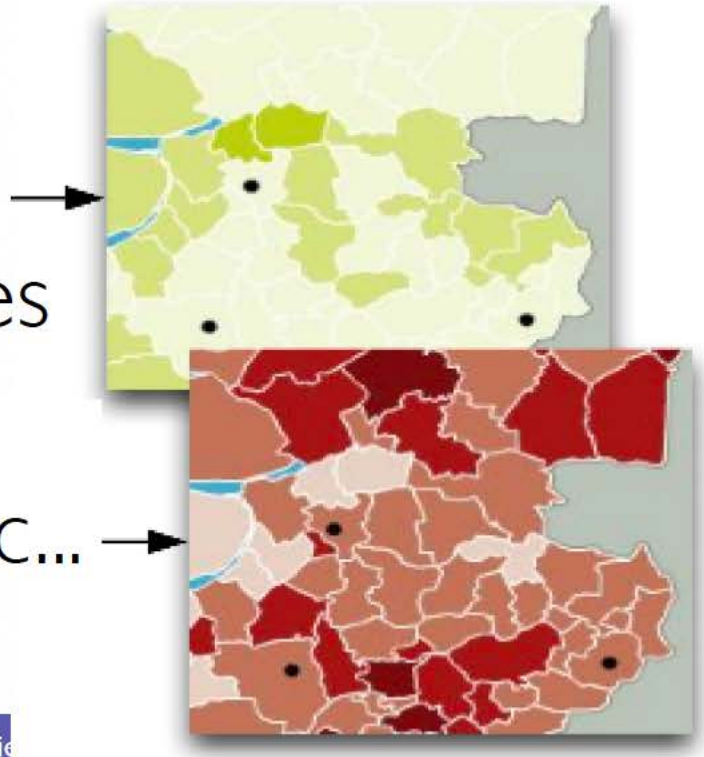

Atlas in (National) GeoData Infrastructure

Cartographic challenges in (N)GDI:

Producers of information

- traditionally worked in isolation, therefore their products were never eant to be combined with other producers' product

Users of information

- have very different datat needs
- for many different purposes

⇒ an (N)GDI is not an atlas!

- if does offer visualisation of seperate data sets, but not optimised for combinations:
  the whole is never more than the sum of the parts...

RGI 111 project (until end 2009)

"National Atlas as gateway to GeoData Infrastructure"

in NGDI an atlas can act as:

- interactive & dynamic gateway
- integrated (visual) summary of available geo–data & –services
- data–provision through spatial search and comparison

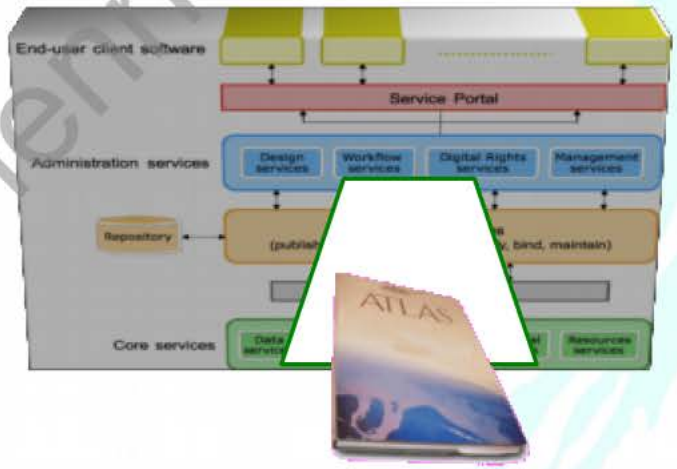

Project goal was to study feasibility using a Test Bed:

- create an architectural framework
- build a proof-of-concept prototype

Architecture

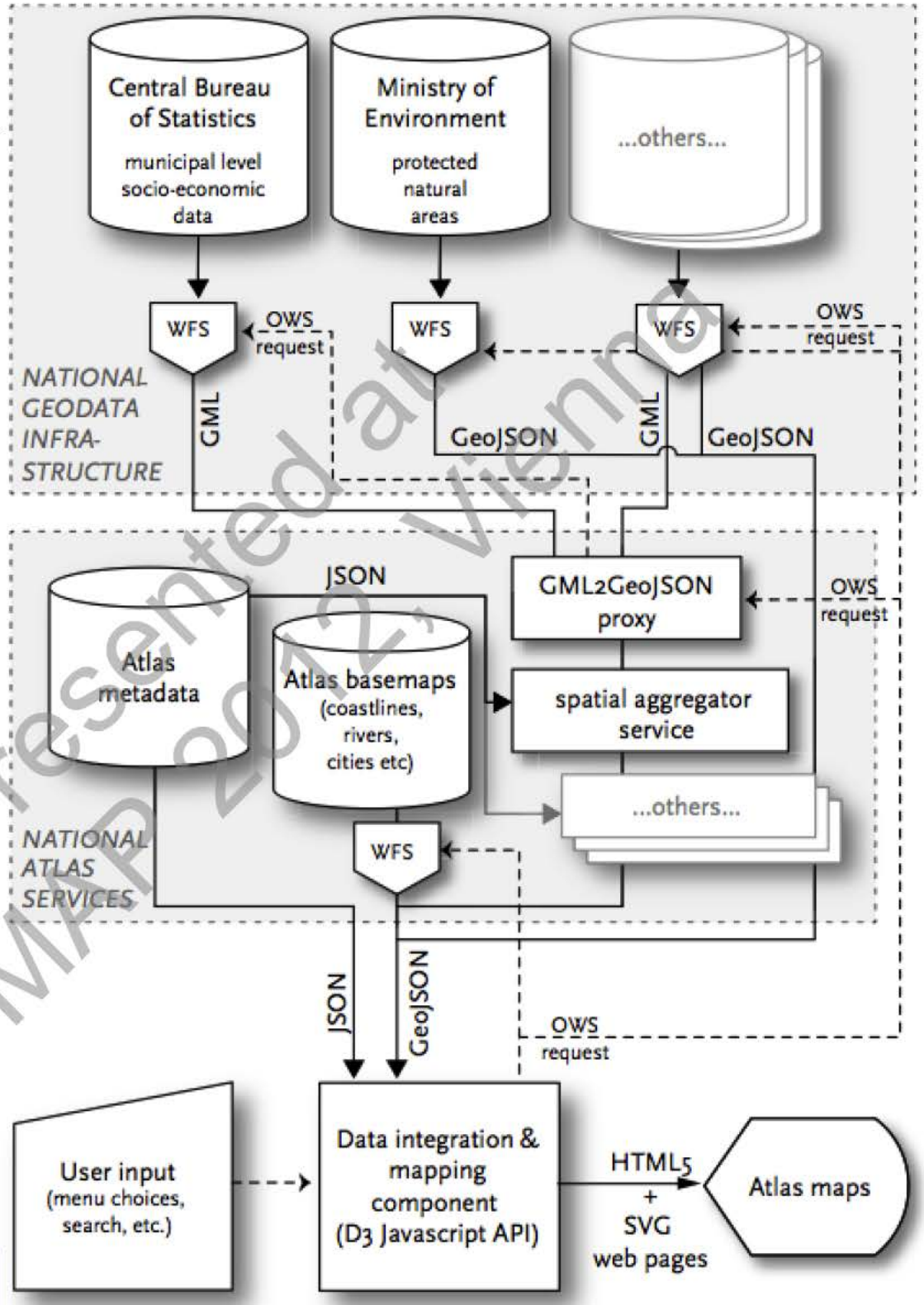

Architecture

NGDI:

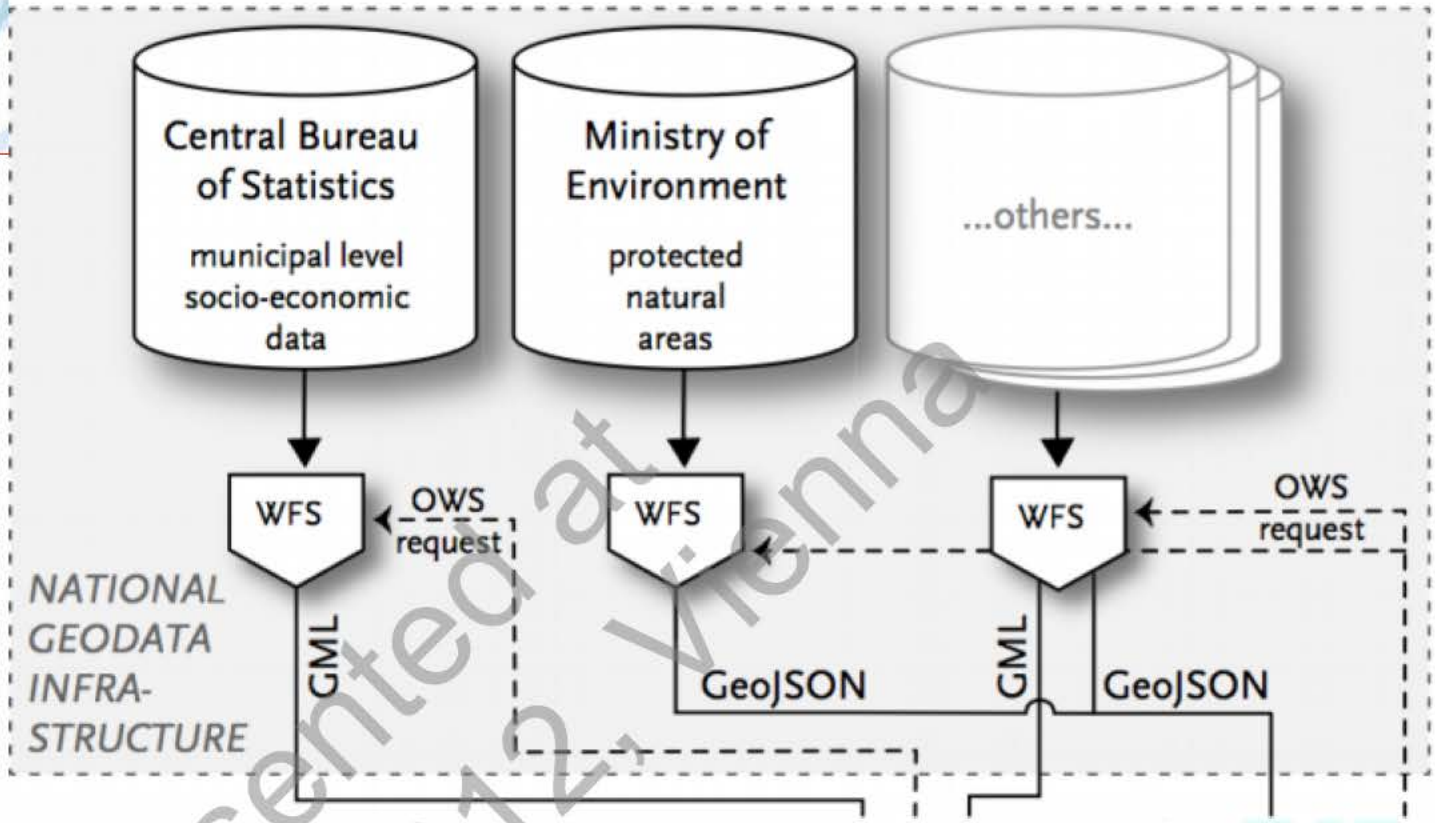

uses *data* services (WFS), not portrayal (WMS)

- get data using regular OWS requests
- get GeoJSON where possible, otherwise GML
- combine and portray data layers in viewer component

Architecture

ATLAS SERVICES:

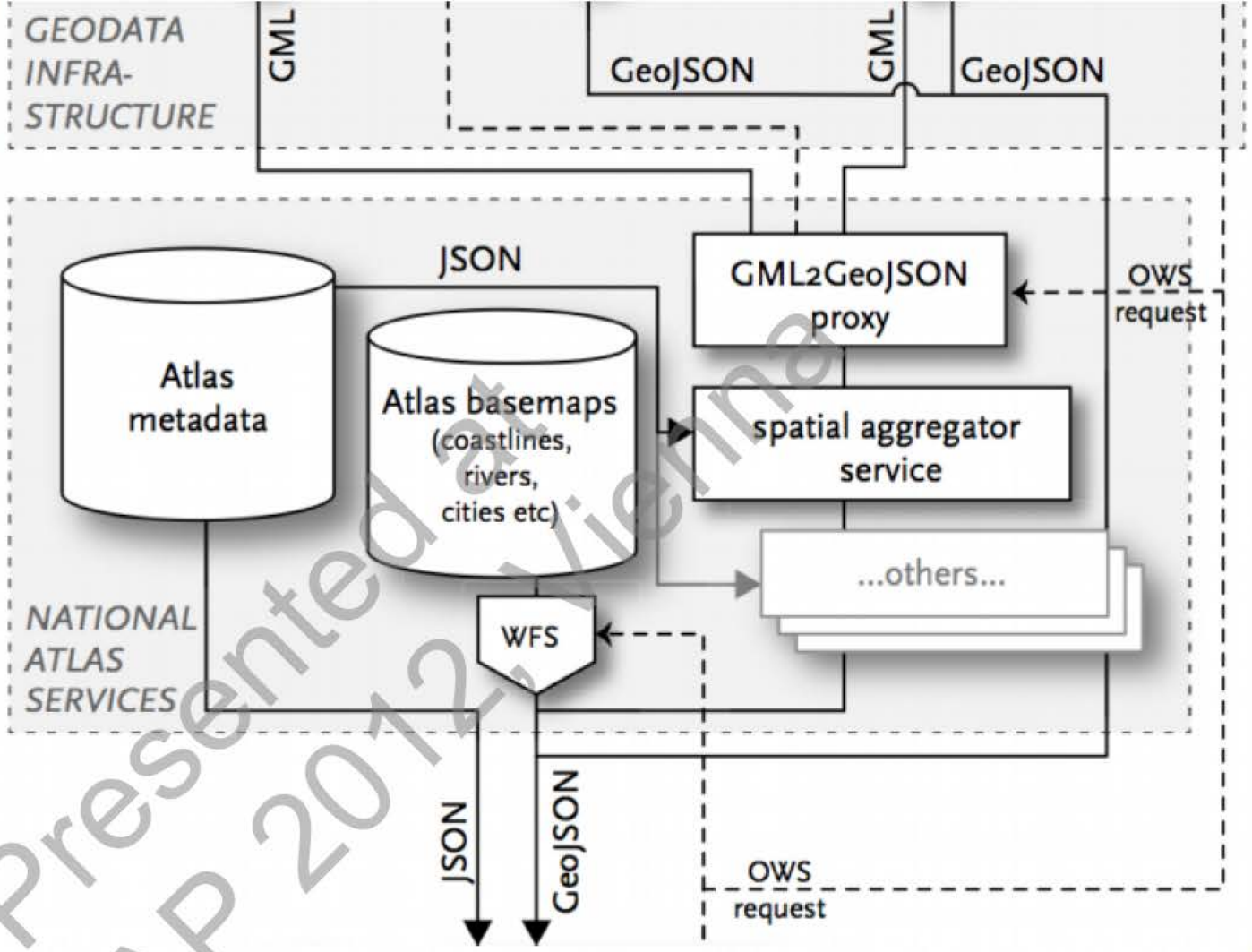

intermediate services & basedata

- Atlas metadata = service configuration
- provide GeoJSON to viewer component

...other helper services posible...

Architecture

Atlas Viewer:

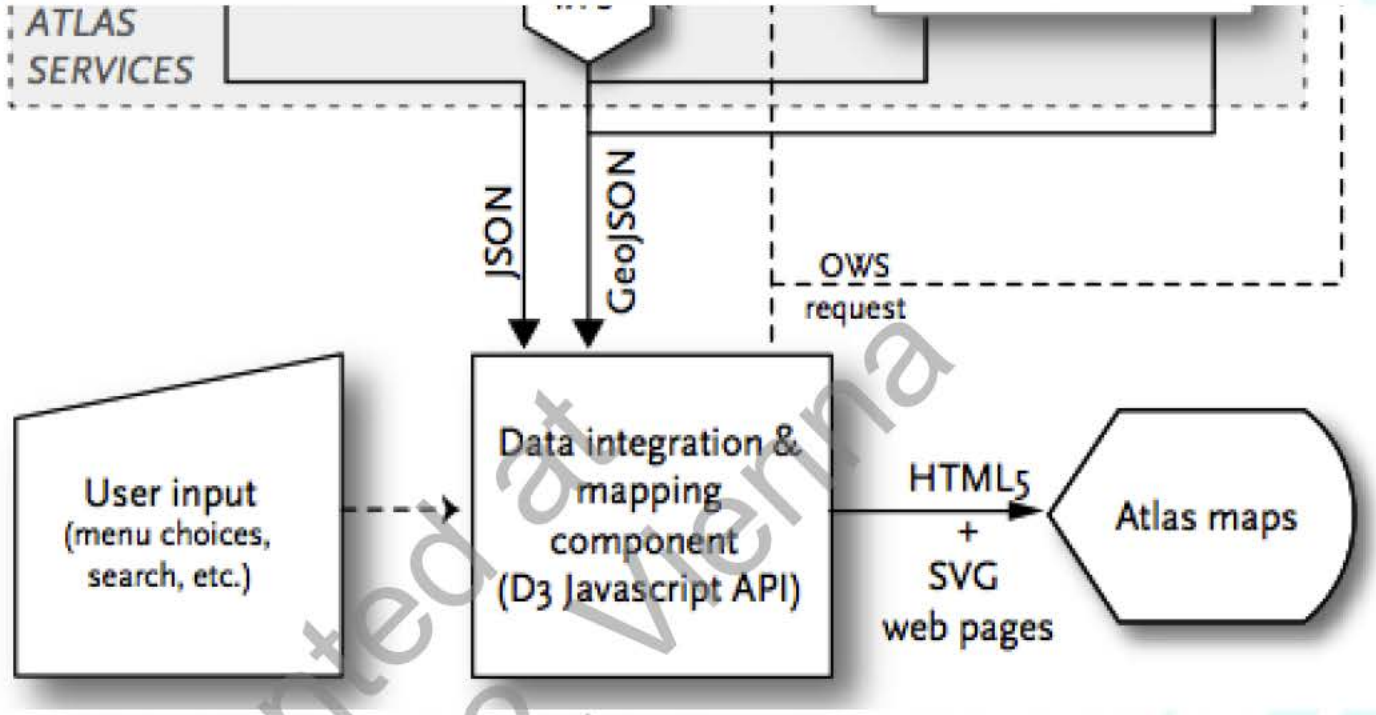

Uses D3.js

- bind arbitrary data to the DOM
- then apply data-driven transformations to it

⇒ very suitable for our project

http://d3js.org
http://mbostock.github.com/d3/tutorial/circle.html

Using the Open Web Platform

The Open Web Platform is the collection of open (royalty-free) technologies which enables the Web

- enabling you to create web applications without the need for proprietary technology

- in our case:

Flash ⇒ HTML + SVG + CSS +

demo time! www.nationaleatlas.nl

KIES ONDERWERP...

Statistische Kerncijfers per gemeente

- Gemeente code
- Gemeente naam
- Aantal inwoners
- Aantal mannen
- Aantal vrouwen
- % 0-14 jaar
- % 15-24 jaar
- % 25-44 jaar
- % 45-64 jaar
- % 65 jaar en ouder
- Aantal huishoudens
- Bevolkingsdichtheid
- % eenpersoons-huishoudens
- % huishoudens zonder kinderen
- % huishoudens met kinderen
- Gemiddelde huishoudensgrootte
- % westerse allochtonen
- % niet-westerse allochtonen
- % Marokkanen
- % Antillanen en Arubanen
- % Surinamers
- % Turken
- % overige niet-westerse allochtonen
- Oppervlakte totaal
- Oppervlakte land
- Oppervlakte water

Natura2000 Beschermde gebieden

- Naam beschermd gebied
- Status beschermd gebied
- Oppervlakte beschermd gebied

Statistische Kerncijfers per gemeente

% eenpersoons-huishoudens

Bron: Centraal Bureau voor de Statistiek (2011)

Gemeentedata uit het gegeneraliseerde Bestand Wijken en Buurten bevat gegeneraliseerde geometrie van alle gemeenten, wijken en buurten in Nederland met als attribuut een aantal statistische kerncijfers. De begrenzingen van wijken en buurten zijn voor een groot deel gebaseerd op wat de gemeenten aan het CBS doorgeven. De gemeentegrens is afkomstig uit de BRK van het Kadaster.

CONCLUSIONS

- work in slow progress (funding ended)
- core is implemented, still missing parts:
  - viewer: better menus, full legends, more maptypes, testing
  - atlas services: spatial aggregator & more
- the test bed shows:
  - that an (National) Atlas in a (National) SDI is feasible
  - provides many advantages (up-to-date, flexible, interoperable)
- some wishes for the future:
  - compare maps in situ (side-by-side, transparency slider)
  - more interactivity
  - ...and much more...
- follow the progress at:

  www.nationaleatlas.nl (follow the english)